REV	ECO	DATE	DESCRIPTION	DB
R2	.	30-May-07	UPDATED DRAWING	KOJ

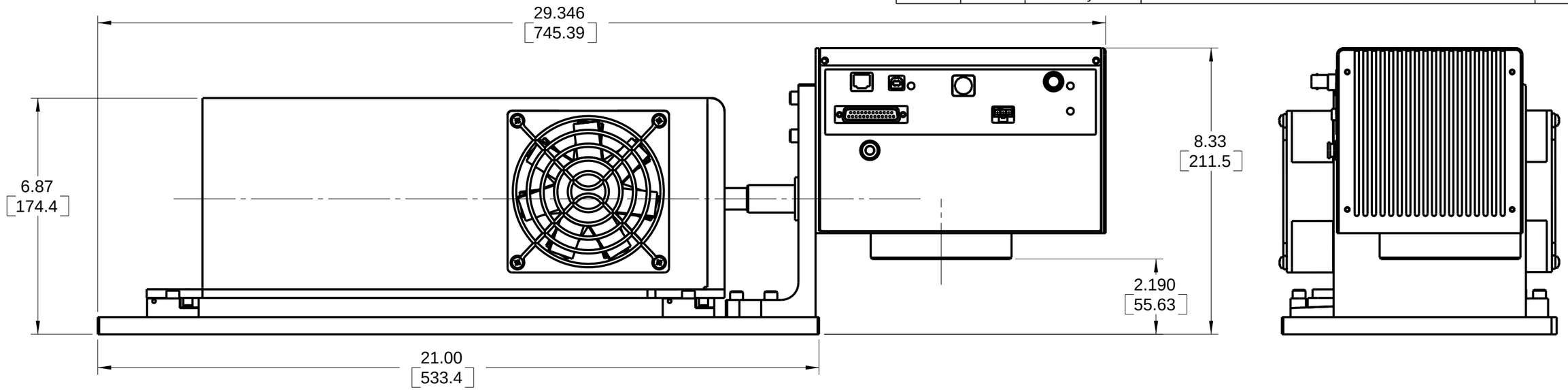

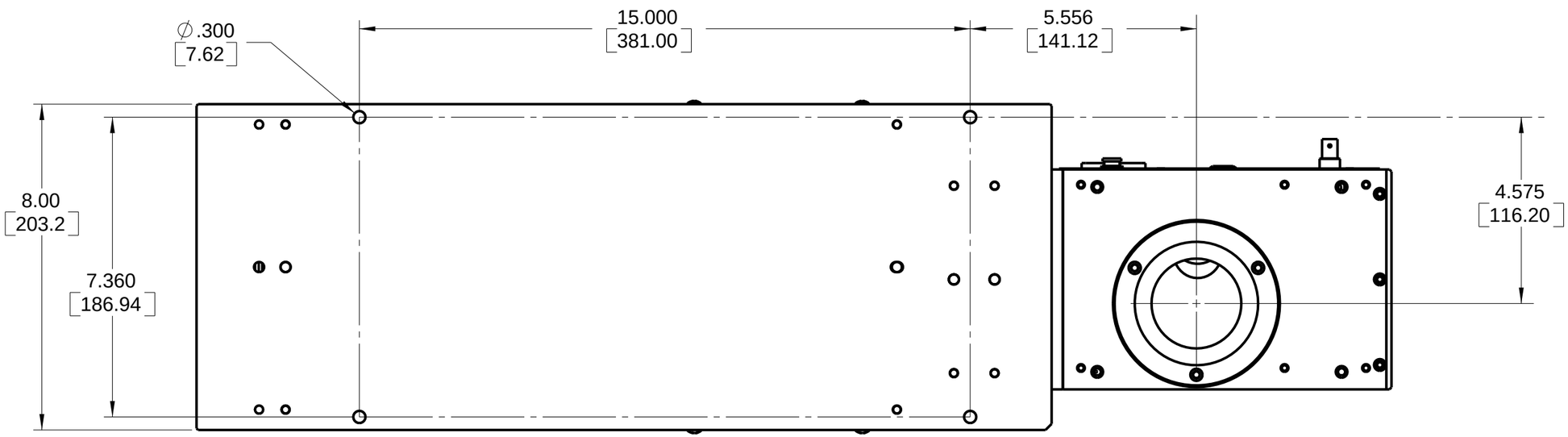

NOTE:
ALL DIMENSIONS ARE IN INCHES.
DIMENSION IN BRACKETS [ ] ARE MILLIMETERS

TOLERANCES UNLESS NOTED:	
.x = Ñ 0.1	ANGLE = Ñ 0.5 °
.xx = Ñ 0.01	
.xxx = Ñ 0.005	
MATERIAL: SEE BOM	
FINISH:	

PROPRIETARY
THIS DRAWING IS PROPRIETARY TO SYNRAD INC. AND SHALL NOT BE USED OR DISCLOSED IN WHOLE OR IN PART WITHOUT WRITTEN PERMISSION OF SYNRAD INC.

SYNRAD
SYNRAD INC.
4600 Campus Place
Mukilteo, WA 98275
Phone: (425)349-3500
Fax: (425)349-3667

DESCRIPTION: OUTLINE & MOUNTING, FLYER HEAD TO V20

PART NUMBER: 300-19676-20		DWG/FILE NUMBER: 300-19676-20	
SHEET 1 of 1	ENG: RLS	DRAWN BY: K. JOHNSON	DATE: 17-Jan-07
UNITS: Inches	CATEGORY:	CHECKED BY:	DATE:
SIZE: B	FINISH CLASS:	APPROVED BY:	DATE: