REV	ECO	DATE	DESCRIPTION	DB
D	3168	1-Mar-06	REVISED NOTE ON FRONT VIEW	KOJ

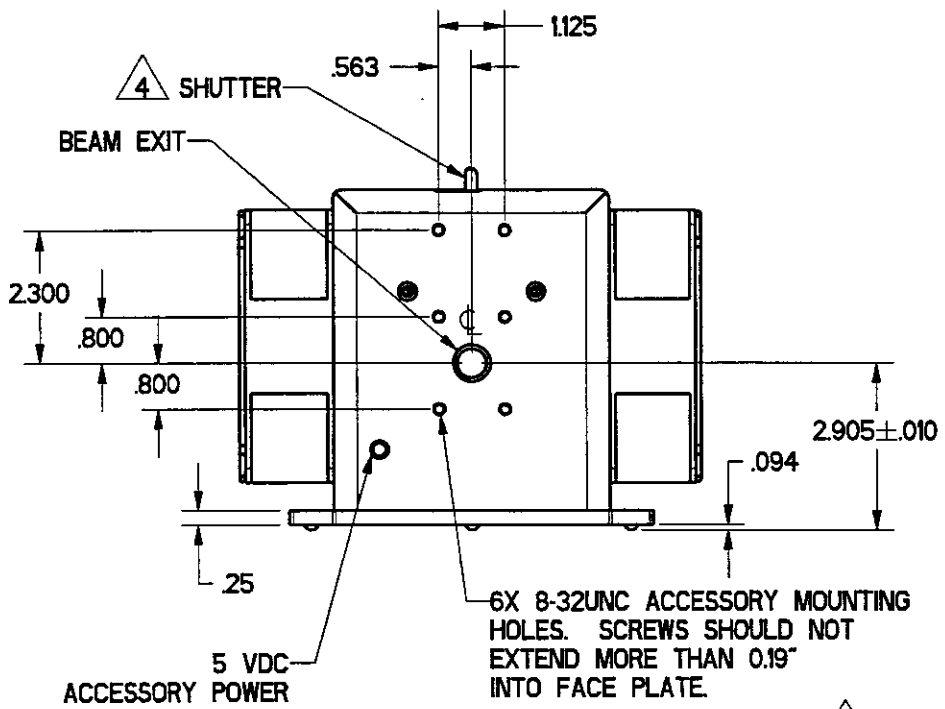

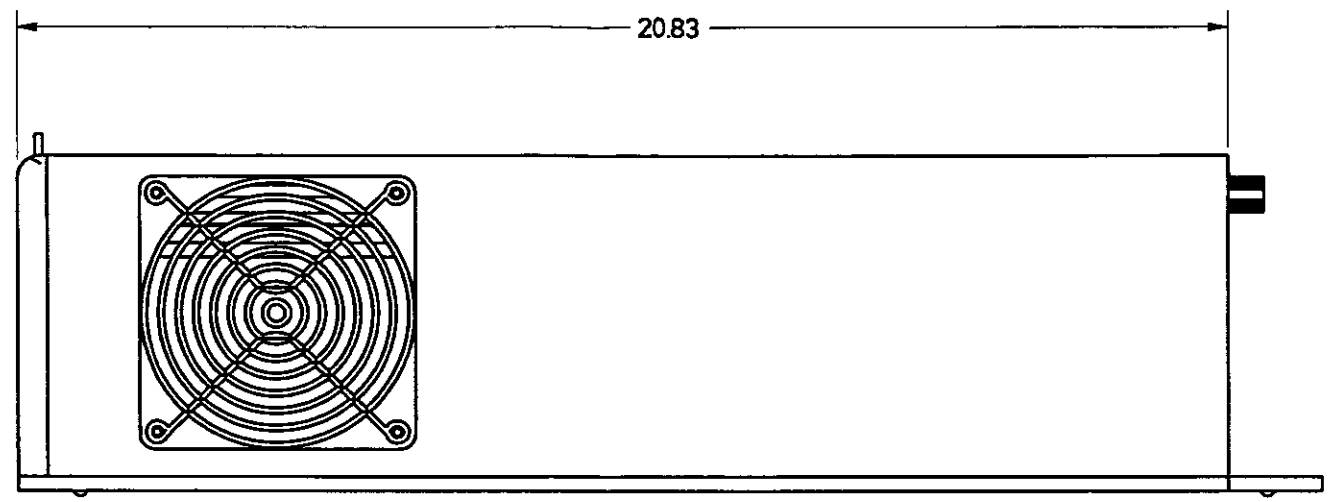

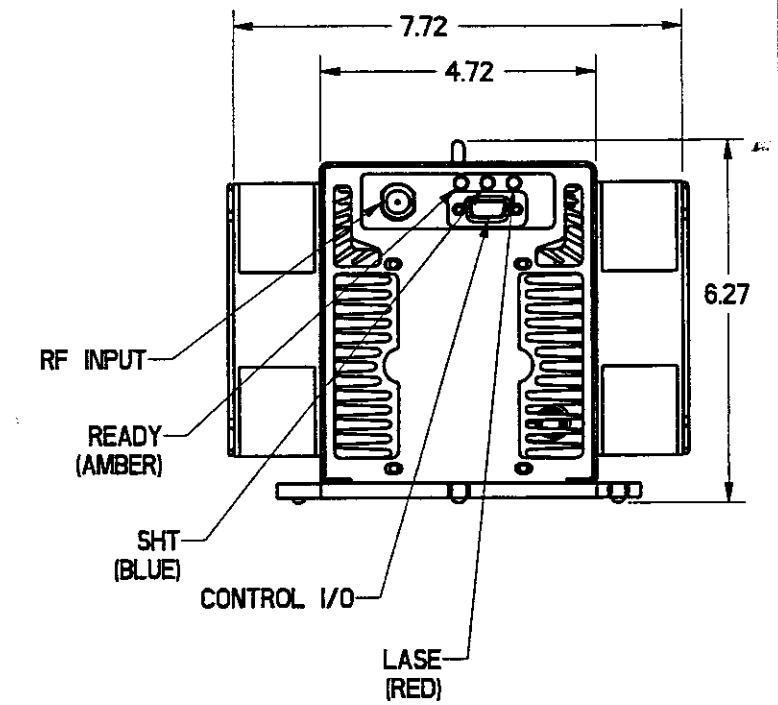

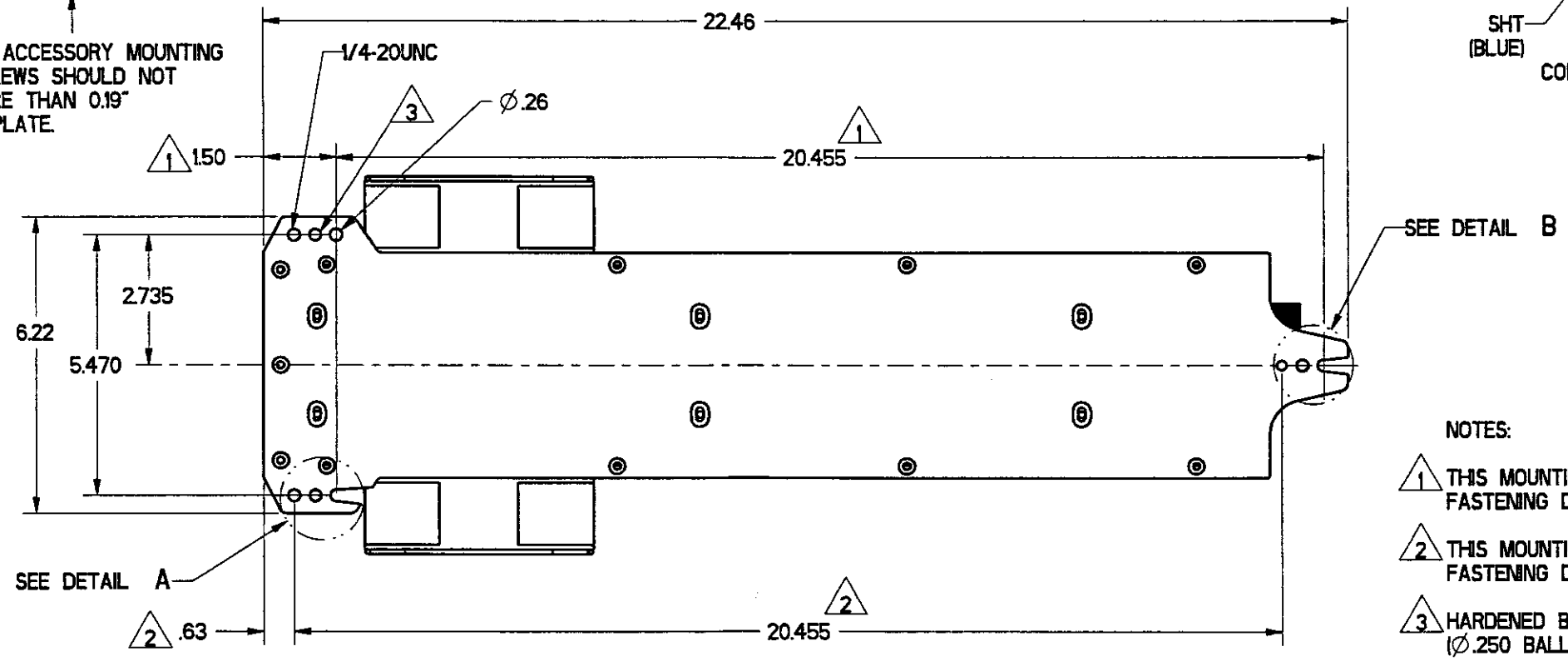

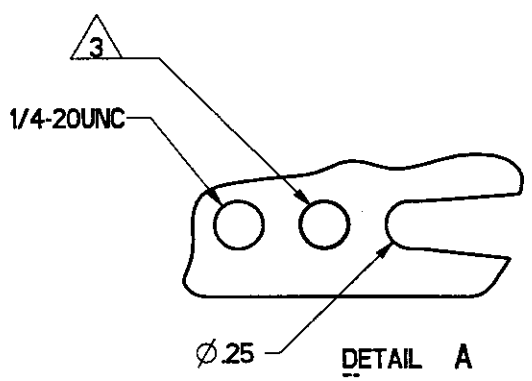

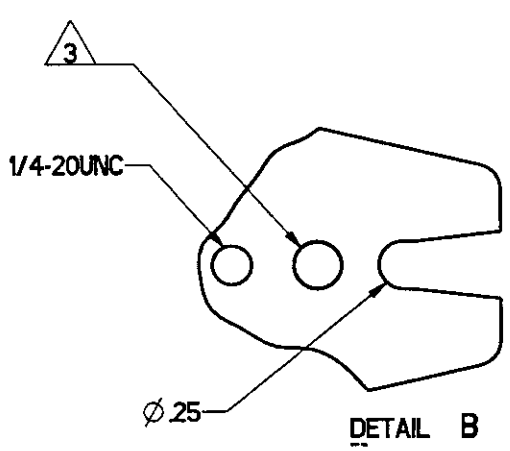

NOTES:

1. THIS MOUNTING PATTERN USED WHEN TOP ACCESS FASTENING DESIRED.
2. THIS MOUNTING PATTERN USED WHEN BOTTOM ACCESS FASTENING DESIRED.
3. HARDENED BALL MOUNTING POINT, 3X (Ø.250 BALL BEARING)
4. KEYSWITCH VERSION ONLY.

PART NUMBER	MODEL
FST60KF	KEY
FST60SF	OEM

Pro/E

TOLERANCES UNLESS NOTED:
x : ±0.1 ANGLE : ±2.0°
xx : ±0.03
xxx : ±0.005

MATERIAL:

FINISH:

PROPRIETARY
THIS DRAWING IS PROPRIETARY TO SYNRAD INC. AND SHALL NOT BE USED OR DISCLOSED IN WHOLE OR IN PART WITHOUT WRITTEN PERMISSION OF SYNRAD INC.

SYNRAD INC.
4600 Campus Place
Mukilteo, WA 98275
Phone: (425)349-3500
Fax: (425)349-3667

DESCRIPTION: OUTLINE AND MOUNTING, FAN-COOLED T60

PART NUMBER: SEE TABLE		DWG/FILE NUMBER: 300-18479-01	
SHEET 1 OF 1	DB: pdmdb	DRAWN BY: C.B. MILLER	DATE: 29-Nov-00
UNITS: INCHES	CATEGORY: I	CHECKED BY: [illegible]	DATE: 3-2-06
SIZE: B	FINISH CLASS: A	APPROVED BY: [illegible]	DATE: 3/7/2006